TOWN OF HILLSBOROUGH

SAN MATEO COUNTY

Public Works Department
650/375-7444
Fax: 650/ 548-0859

1600 Floribunda Ave.
Hillsborough
California 94010

Requirements for Parking Strips Handout

Parking Strip Requirements: Chapter 12.24.020 of the Hillsborough Municipal Code requires compliance with City Engineer's standards for work within the public right-of-way.

The City Engineer's standards require the installation of a 5-foot wide parking strip and curb and gutter along the street frontage of the property for construction projects involving more than 50% of the living area of a house or work in the right-of-way (Encroachment) that exceeds $30,000 under the following circumstances:

- √ Property is within 500' of schools or public facilities;
- √ Property abuts a street which is less than 18' in width;
- √ Neighborhoods with parking congestion as determined by the Police Chief or City Engineer;
- √ Properties with limited or inaccessible on-site parking as determined by the Planning Dept;

The partial exceptions to this requirement are:

1. If, due to existing topography, construction of a retaining wall greater than 18" high is required within the right-of-way to install the parking strip; or,
2. If the health of significant trees would be jeopardized as a result of the installation of a parking strip (an arborist report must be provided with each plan set as part of the project application).

Note: **Exceptions to parking strip requirements must be granted in writing by the City Engineer *prior to* submitting an application for review by the Architecture and Design Review Board and installation/rehabilitation of curb and gutter may be required even if the parking strip requirement is not required.**

The development of a parking strip and curb and gutter meeting Town standards (see below), including dimensions and specifications for materials, should be included in the project site plan as part of all project applications.

Parking Strip Standards: All work within the public right-of way requires an Encroachment Permit, which must be inspected by the Public Works Department (please call 375-7444 to schedule inspections). The acceptable materials for the surface of parking strips are as follows:

- Bricks or Interlocking Pavers (sand bedding, cross-section detail- see pg. 2)
- Decomposed Granite (4" with polymer additive and less than 5% street grade, with same 6" base section as cross-sectional detail)
- Grass-crete or turf block (Cross-section detail - see pg. 2)

Parking strips made of asphalt, mulch, loose rock, and concrete are not allowed.

The 5-foot wide parking strip shall have a 2" x 6" header made of redwood or recycled plastic (treated wood is prohibited) along the back edge and shall be constructed with a two percent (2%) cross-slope towards the curb and gutter.

TOWN OF HILLSBOROUGH

SAN MATEO COUNTY

Public Works Department
650/375-7444
Fax: 650/ 548-0859

1600 Floribunda Ave.
Hillsborough
California 94010

Requirements for Parking Strips (Continued)

Roadway Cross Section

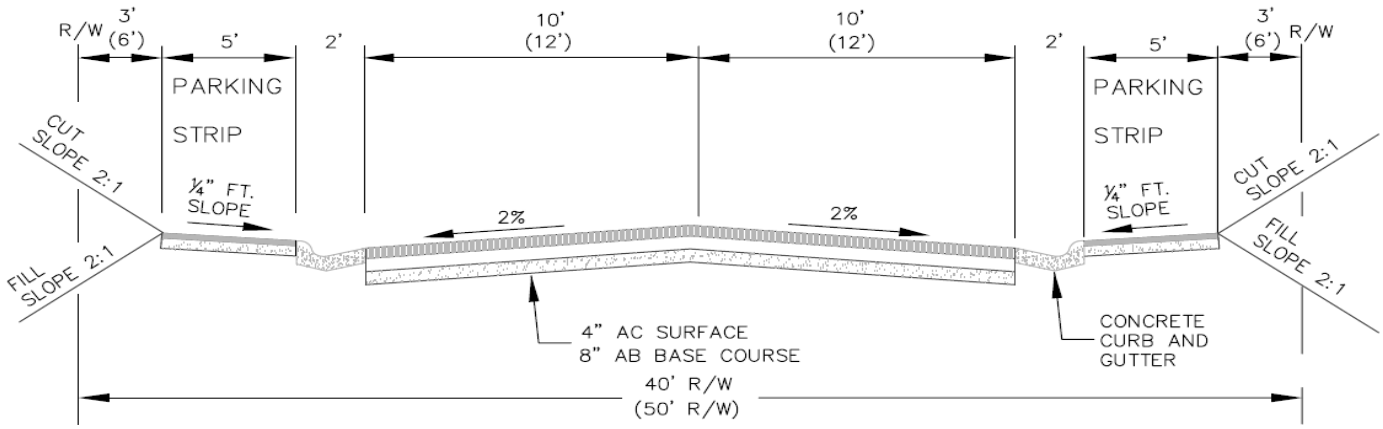

Not to Scale

Cross - Section Detail for Brick and Interlocking Pavers

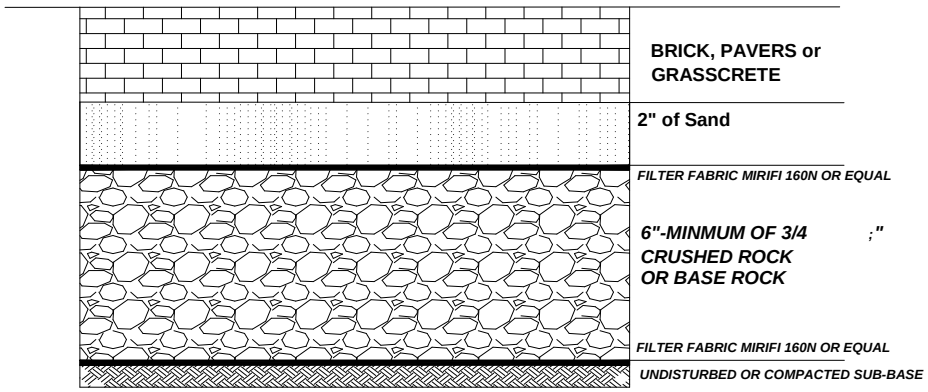

Not to Scale

***Notes*:**

1. **Hillsborough Municipal Code Chapter 12.04.120 specifies that the property owner is responsible for the maintenance and repair of frontage improvements up to, and including, the curb and gutter.**
2. **Permitee must schedule two inspections with the Public Works Department (1) following completion of form work, compaction of the sub-base, crushed rock or base rock section and installation of both layers of filter fabric (2) upon the completion of the parking strip.**